Cuisinart®

Instruction Booklet
Venture™ Portable Gas BBQ

CGG-750XA

⚠ WARNING: FOR OUTDOOR USE ONLY

⚠ **This instruction manual contains important information necessary for the proper assembly and safe use of the appliance.**
⚠ **Read and follow all warnings and instructions before assembling and using the appliance.**
⚠ **Follow all warnings and instructions when using the appliance.**
⚠ **Keep this manual for future reference.**
Note to customer: Leave this Owner's Manual in a convenient place for future reference.

⚠ DANGER

1. **Do not store or use gasoline or other flammable liquids or vapors in the vicinity of this or any other appliance.**
2. **An LP cylinder not connected for use shall not be stored in the vicinity of this or any other appliance.**

⚠ DANGER

If you smell gas:
1. **Shut off gas to the appliance.**
2. **Extinguish any open flame.**
3. **If odor continues, keep away from the appliance and immediately call your fire department.**

⚠ DANGER

Failure to follow these instructions could result in fire, explosion or burn hazard, which could cause property damage, personal injury or death.

⚠ DANGER

1. **Never operate this appliance unattended.**
2. **Never operate this appliance within 3.05m of any other gas cylinder.**
3. **Never operate this appliance within 7.5m of any flammable liquid.**
4. **If a fire should occur, keep away from the appliance and immediately call your fire department. Do not attempt to extinguish an oil or grease fire with water.**
5. **Heated liquids remain at scalding temperatures long after the cooking process. Never touch cooking appliance until liquids have cooled to 45ºC or less.**

⚠ DANGER

Failure to follow these instructions could result in fire, explosion or burn hazard, which could cause property damage, personal injury or death.

Contents

Warnings and Safety Instructions 3
Parts List & Exploded View 4
Instructions 5
- Select a proper location 5
- Special Instructions for the use of regulator and cylinder 7

Operating Your BBQ 10
- Installing the gas cylinder 10
- Checking for gas leak 10
- Lighting instructions 11
- Match lighting 11
- Using the BBQ 12

Care and Maintenance....13
FAQ and Troubleshooting....15
Warranty....16

1. Warnings and Safety Instructions

If these instructions are ignored, there is a possibility of a hazardous fire or explosion which could result in physical injury or property damage! It is your responsibility to assemble, operate and maintain your gas BBQ properly.

READ ALL WARNINGS AND INSTRUCTIONS PRIOR TO ASSEMBLING AND OPERATING YOUR BBQ

WARNINGS:

- ⚠ **This BBQ is for outdoor use only. It should NOT be used in a building, garage or any other enclosed area.**
- ⚠ **This BBQ is not intended to be used in or on boats or in or on recreational vehicles.**
- ⚠ **Only use in well-ventilated areas.**
- ⚠ **Carbon monoxide hazard — using this appliance in an enclosed space may cause death. do not use in caravans, tents, marine craft, cars, mobile homes or similar locations.**
- ⚠ **Caution: Accessible parts may be very hot. keep young children away.**
- ⚠ **The use of alcohol, prescription or non-prescription drugs may impair an individual's ability to properly assemble or safely operate this appliance.**
- ⚠ **Do not leave the BBQ unattended.**
- ⚠ **Keep children and pets away from the BBQ all the times.**
- ⚠ **Do not use the BBQ in high wind.**
- ⚠ **This BBQ must be used with propane gas only. Liquid propane is not natural gas. The conversion or attempted use of natural gas in a liquid propane BBQ is dangerous and will void your warranty.**
- ⚠ **Do not attempt to attach this BBQ to the self-contained propane system of a camper, trailer, motor home or house.**
- ⚠ **Do not use this appliance if it is leaking, damaged or does not operate properly.**
- ⚠ **Do not use charcoal or lighter fluid.**
- ⚠ **Do not use gasoline, kerosene or alcohol for lighting.**
- ⚠ **Do not move appliance when in use. Allow the BBQ to cool to 45ºC before moving or storing.**
- ⚠ **Do not use the BBQ unless it is COMPLETELY assembled and all parts are securely fastened and tightened. If there are any missing or damaged parts, contact customer service for a replacement.**
- ⚠ **Do not alter or modify the BBQ in any manner.**
- ⚠ **Do not operate the BBQ if there is gas leak present.**
- ⚠ **This appliance is not intended to be installed in or on a boat or recreational vehicle.**
- ⚠ **Locate the BBQ away from any combustible or non-combustible materials or construction by at least 1 metre from the back and sides.**
- ⚠ **The appliance shall not be located used under overhead unprotected combustible construction.**
- ⚠ **This appliance is not intended for and should never be used as a heater.**
- ⚠ **This appliance will be hot during and after use. Use insulated oven mitts or gloves for protection from hot surfaces or splatter from cooking liquids.**
- ⚠ **This appliance is not intended for commercial use.**
- ⚠ **The pressure regulator and hose assembly supplied with the outdoor cooking gas appliance must be used. Replacement pressure regulators and hose assemblies must be those specified by the outdoor cooking gas appliance manufacturer.**
- ⚠ **Wait until BBQ has fully cooled down to put the wooden cutting board on top.**
- ⚠ **When BBQ is not in use, keep wooden cutting board on top.**
- ⚠ **This appliance must only be serviced by an authorized person.**

2. Parts List & Exploded View

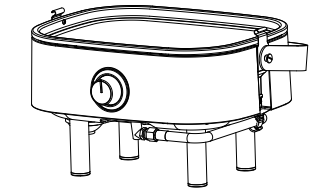

BBQ Body x 1 pc

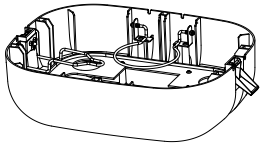

Base Unit x 1pc

Cutting Board x 1pc

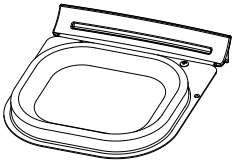

Drip Tray x 1 pc

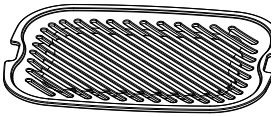

Cooking Grate x 1 pc

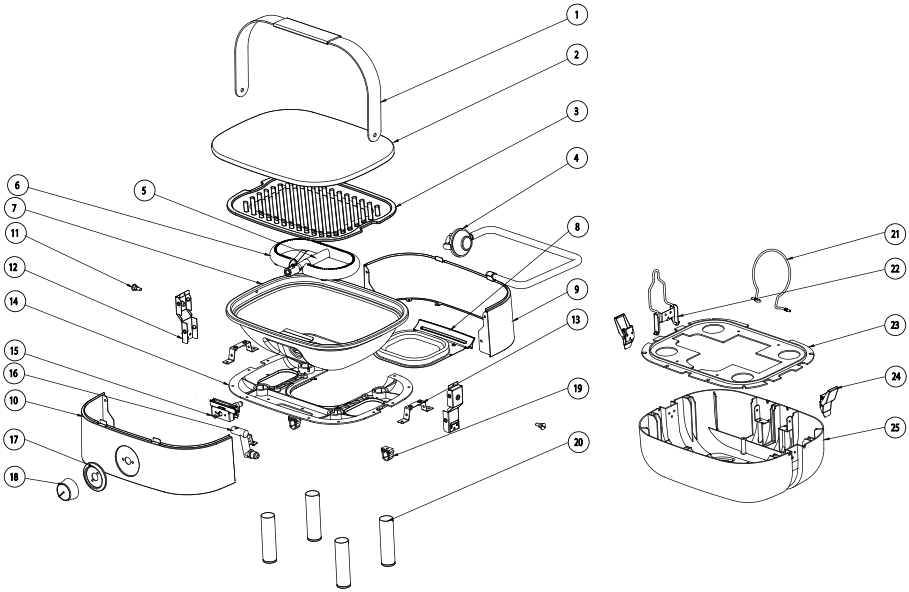

1	Handle	10	Front Skin Panel	19	Hose Retaining Clip
2	Cutting Board	11	Handle Bolt	20	Body Leg
3	Cooking Grate	12	Side Bracket Assembly	21	Cylinder Retaining Loop
4	Regulator and Hose Assembly	13	Sink Mounting Bracket	22	Base to Body Securing Mount
5	Venturi Tube	14	Sink Base	23	Base Insert
6	Burner Assembly	15	Gas Valve	24	Side Clasp
7	Sink Assembly	16	Gas Inlet Manifold	25	Base
8	Grease Tray Assembly	17	Control Dial Surround		
9	Rear Skin Panel	18	Control Dial		

3. Assembly Instructions

3.1 Select a Proper Location

⚠ DANGER

1. Never use this outdoor BBQ inside any building, garage, shed or breezeway, or inside any boat, trailer or recreational vehicle and/or boat, to prevent possible fire and to prevent the possibility of carbon monoxide poisoning or asphyxiation.
2. Always place your BBQ on a hard and level surface far away from combustible materials and structures.
3. Do not use this BBQ under an overhead combustible surface or covered area (e.g., awnings, umbrellas, porches or gazebos). Keep all combustible surfaces at least 1 metre away.
4. Locate the BBQ away from any combustible and non-combustible material or construction by at least 1 metre from the back and side. (See the diagram to the right.)

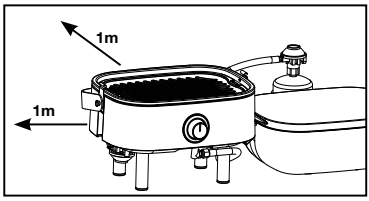

5. This appliance should only be used in an above ground open air situation with natural ventilation, without stagnant areas, where gas leakage and products of combustion are rapidly dispersed by wind and natural convection. Any enclosure in which the appliance is used shall comply with one of the following:
   (A) An enclosure with walls on all sides, but with no overhead cover.
   (B) Within a partial enclosure that includes an overhead cover and no more than two walls.
   (C) Within a partial enclosure that includes an overhead cover and more than two walls, the following shall apply:
      (1) At least 25 % of the total wall area is completely open.
      (2) 30 % or more in total of the remaining wall side, back and front wall areas is open and unrestricted.
      (3) In the case of balconies, 20 % or more of the total wall area should remain open and unrestricted.
6. Never store or use gasoline or other flammable or volatile substances in the vicinity of this BBQ or in the vicinity of any other heat-generating appliance, because of the danger of starting a fire.
7. The cylinder must be disconnected when the appliance is not in use.
8. Do not obstruct the flow of combustion and ventilation air.
9. Do not move the appliance / BBQ while it is in operation.
10. The maximum hose length to be used with this appliance is 60cm..
11. Do not obstruct the flow of combustion and ventilation air.

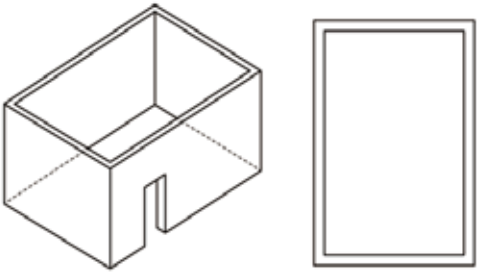

Figure D.1 — Outdoor area — Example 1

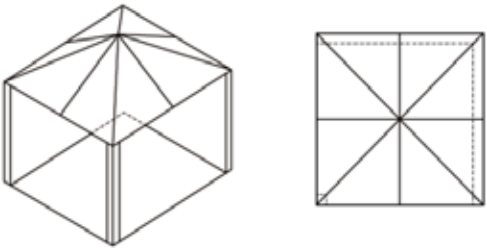

Figure D.2 — Outdoor area — Example 2

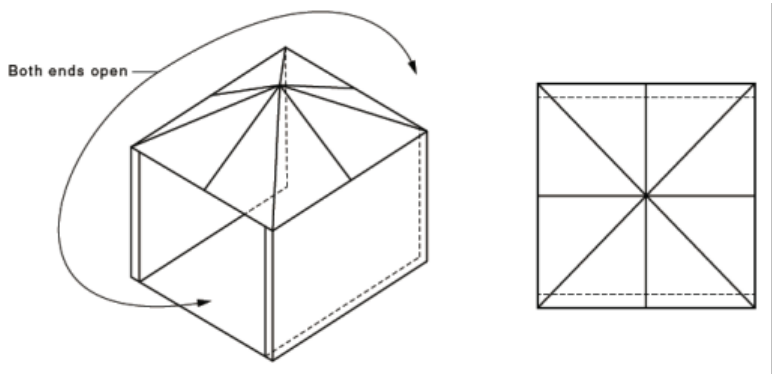

Figure D.3 — Outdoor area — Example 3

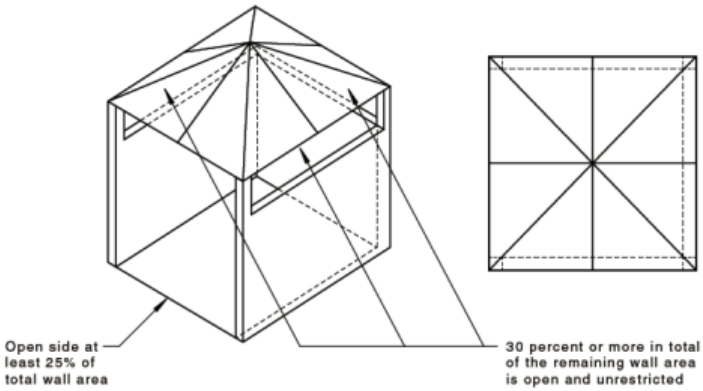

Figure D.4 — Outdoor area — Example 4

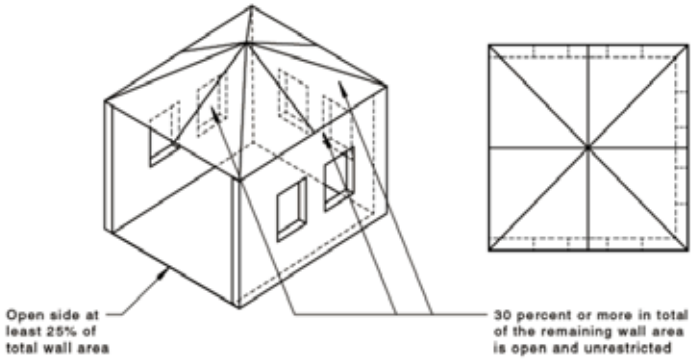

Figure D.5 — Outdoor area — Example 5

3.2 Special Instructions for the Use of Regulator and Propane Cylinder

A propane gas cylinder / cartridge is required for operation. Use a 400g - 450g propane gas cylinder / cartridge.

- This appliance shall only be used with a non-refillable 1lb Propane bottle certified to DOT-39 NRC 232/290 M1110. **IT MAY BE HAZARDOUS TO ATTEMPT TO FIT OTHER TYPES OF GAS CONTAINERS.**
- Store spare fuel canisters in a well-ventilated area away from the BBQ.
- Do not puncture or burn fuel canister.
- If the BBQ is not in use, the control knob must be turned to the OFF position to shut off the gas flow from the cylinder.
- Do not store a spare propane cylinder under or near this BBQ.
- Save the cylinder cap and reinstall when not in use.
- Cylinder must always be upright, never leave sideways.
- To check whether the gas cartridge is empty, firstly disconnect and then shake gently. If there is gas remaining in the cartridge there will be sounds of liquid inside..
- Always remove propane gas cylinder from BBQ when transporting and when not in use.
- Remove any transit protection.
- The appliance is to be operated on a horizontal surface.
- The gas containers shall be changed in a well-ventilated location, preferably outside away from people and any sources of ignition, such as naked flames, pilot flames, electric heaters/equipment.
- After use, turn the appliance control valve off and remove propane cartridge.
- Avoid twisting or kinking the flexible hose.

Remove all the contents from packaging, and ensure all parts are present before attempting to assemble. (See Parts List on page 4)

Step 1:

Undo clasps holding base to BBQ body and lift body away from base. Place base and body on a solid, level surface.

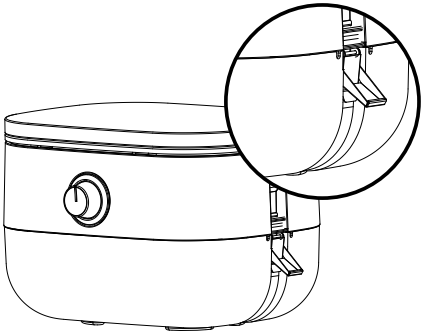

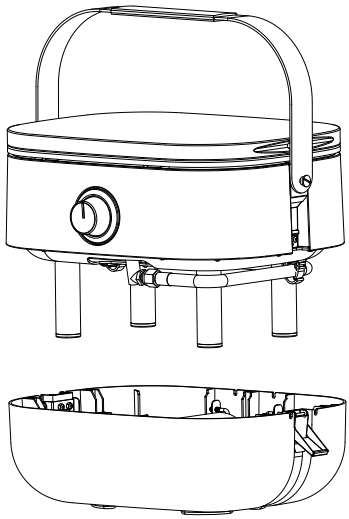

Step 2:

Install grease tray by sliding tray into rear of BBQ.

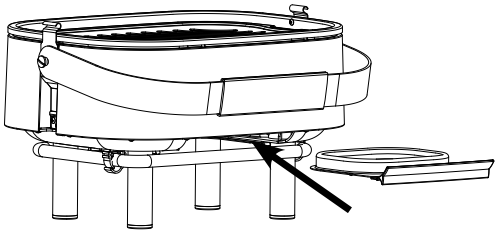

Step 3:

Flip bottle retaining loop in base so loop is outside base.

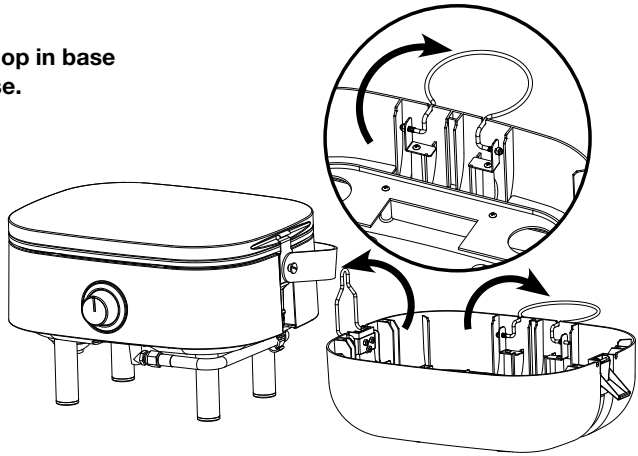

Step 4:

Lift wooden cutting board away from BBQ top and place onto base.

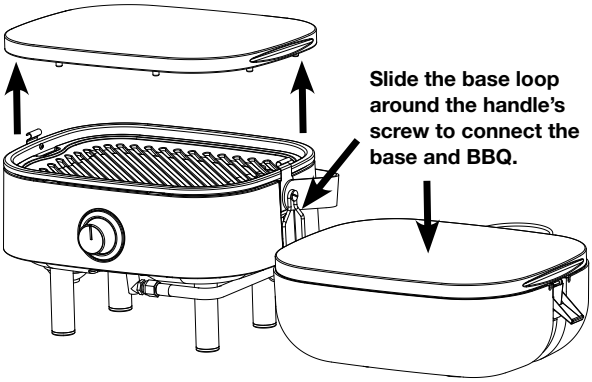

Step 5:

Unclip hose and regulator assembly from bottom of BBQ. Screw gas cylinder onto regulator.

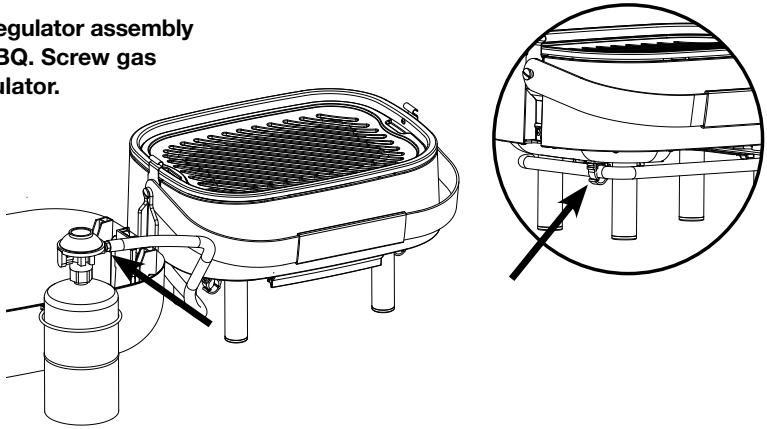

Step 6:

Place connected gas cylinder into retaining loop in base.

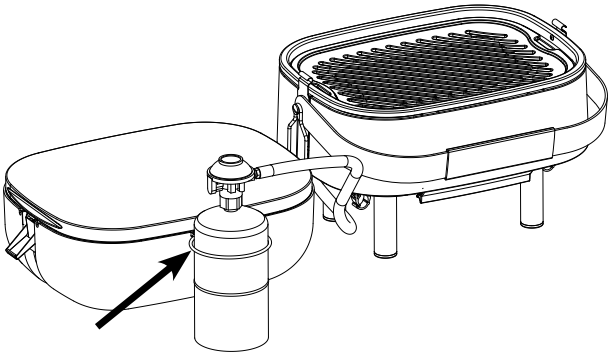

4. Operating Your BBQ

Important: please read these user instructions carefully to familiarise yourself with the appliance before connecting it to its gas cartridge. Keep these instructions for future reference.

Before proceeding, make certain that you understand the WARNINGS section of this manual.

- Preparation before cooking – To prevent foods from sticking to the cooking BBQ, apply a light coat of cooking or vegetable oil to food before barbecuing session.
- Note: When cooking for the first time, paint colors may change slightly as a result of high temperatures. This is normal and should be expected.
- Clean and inspect the hose before each use of the outdoor cooking gas appliance.
- If it is evident there is excessive abrasion or wear, or the hose is cut, it must be replaced prior to the outdoor cooking gas appliance being put into operation. The replacement hose assembly shall be that specified by the manufacturer.
- Keep the fuel hose supply away from any heated surfaces.
- Do not obstruct the flow of combustion and ventilation air to the main burner, the openings in the base of the BBQ body or the opening to the grease cup.
- Do not use this appliance if it is leaking, damaged or does not operate properly.

4.1 Installing the Gas Cylinder

(The propane gas cylinder is not provided with the appliance.)

This appliance shall only be used with a non-refillable 1lb Propane bottle certified to DOT-39 NRC 232/290 M1110. **IT MAY BE HAZARDOUS TO ATTEMPT TO FIT OTHER TYPES OF GAS**. **CHECK THAT SEALS BETWEEN THE APPLIANCE AND THE GAS CONTAINER ARE IN PLACE AND IN GOOD CONDITION BEFORE CONNECTING THE GAS CONTAINER. DO NOT USE THIS APPLIANCE IF IT HAS DAMAGED OR WORN SEALS.**

Connect the gas cylinder to the BBQ outdoors only.

Read and follow all directions on the cylinder.

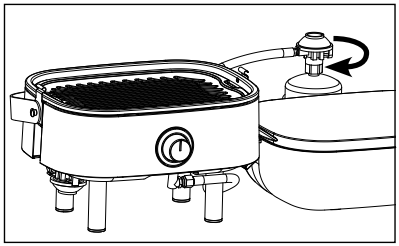

1. Turn the burner control knob to OFF position.
2. Remove the protective caps from the cylinder valve and coupling nut, if present.
3. Unclip hose and regulator assembly from bottom of base. Connect the regulator to the gas cylinder. Ensure the gas cylinder is in an upright position.
4. TIGHTEN BY HAND ONLY. Do not use tools.
5. Place connected cartridge into retaining loop in base.
6. Only use the hose assembly as supplied with this appliance for connection to the cylinder — **DO NOT USE ADAPTORS**.

Removal Of The Gas Cylinder

1. Turn the burner control knob to OFF position.
2. Turn the cylinder counterclockwise until it comes off.

4.2 Checking for a gas leak

⚠ DANGER

If you suspect a gas leak and/or can smell gas, turn off the appliance and then disconnect the gas by unscrewing the gas cartridge from the regulator.

Check gas system for leaks to prevent fire or explosion hazard

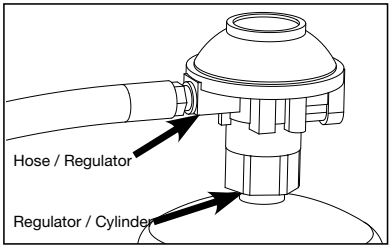

1. The “Leak Check” must be performed before lighting the BBQ and each time the cylinder is connected for use.
2. Do not smoke or allow other sources of ignition in the area while conducting a leak test.
3. Conduct the leak test outdoors in a well-ventilated area.
4. Do not use matches, lighters or a flame to check for leaks.
5. Do not use BBQ until all leaks have been stopped. If you are unable to stop a leak, disconnect the propane supply, and contact Cuisinart Customer Service on 1800 566 567 for a replacement hose and regulator assembly.

Leak Check Method

If there is a leak from your appliance (smell of gas) and you cannot stop the gas flow, remove the appliance to a well-ventilated location away from any ignition source. Check for leaks using soapy water. Do not try to detect leaks using a flame.

1. Make 50-100ml of leak solution by mixing one part liquid dishwashing soap with three parts water.
2. Make sure control knob is in the OFF position.
3. Spray or paint some leak solution on the cylinder and regulator connection.
4. Inspect the solution at the connections, looking for bubbles. If no bubbles appear, the connection is secure.
5. If bubbles appear, a leak is detected. Go to step 6.
6. Disconnect the cylinder from the regulator, and reconnect. Make sure the connection is secure and no leak is found before using the BBQ.
7. If you continue to see bubbles, **DO NOT USE THE BBQ.** Repeat the above process with a different gas cylinder. If leaks are still present, contact the customer service center.

4.3 Lighting Instructions

1. Read all instructions before lighting.
2. Make sure the gas control knob is in OFF position and cutting board is removed from top.
3. Push the gas control knob in and turn counterclockwise until you hear a click.
   - If burner does not light, return to OFF position and try again.
   - Once ignition has occurred, hold dial in for at least 5 seconds to ensure the burner stays lit.
   - If burner does not light or stay lit after holding dial in for 5 seconds, turn the dial to OFF position and wait for 5 minutes and try again. Do not continuously hold the dial in as you may cause a build up of gas.
   - In windy conditions shield from wind to ensure easy lighting.
   - After ignition, the burner should be burned at the high position for 3-5 minutes in order to preheat the BBQ.

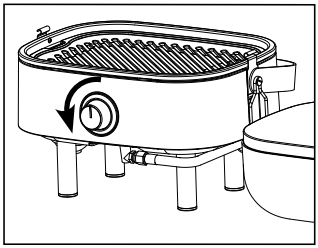

4.4 Match lighting

IMPORTANT!

Remove the cooking grate from the BBQ.

Match lighting instructions:

1. Read all instructions before lighting.
   - Place a lit match beside the burner.
   - After successful lighting, light burner as desired.
   - If burner fails to ignite after repeated attempts, contact the help line number stated in this manual.

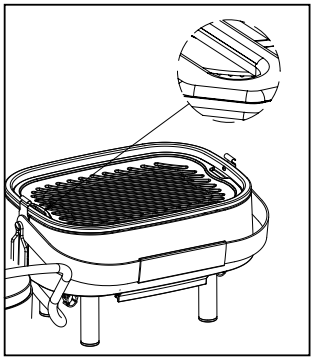

⚠ CAUTION:

Do not touch any hot BBQ parts. The outside of the BBQ bottom especially becomes very hot during use. Use protective gloves to handle any parts that might become hot during use.

- In the event of an uncontrollable fire, immediately disconnect the gas cylinder moving it away from fire and contact the fire services. **DO NOT PUT YOURSELF AT RISK!**
- Ensure aerosols are not used near this unit when in use.
- Ensure all packaging and plastic bags are disposed of safely.

4.5 Using the BBQ

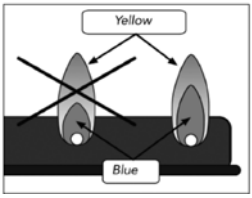

The flame of the burner should be blue with a slight yellow tip. If you notice that the flame is predominantly yellow, larger than normal and or creating black smoke it indicates abnormal operation. Stop using the appliance and have it serviced by a qualified gas technician. Yellow tips on flames up to 6cm height are acceptable as long as no carbon or soot deposits appear.

During operation, stand to the side of BBQ.

Do not expose any part of your body directly above the cooking area.

The burner opening must be positioned properly over the valve orifices.

Flare-Up Control

IMPORTANT – FLARE UPS CAN OCCUR FROM RESIDUE FAT AND JUICES DRIPPING ONTO THE BURNER. To reduce this, regularly clean the burner. To control flare-ups, it is advisable to trim away excess fat from meat and poultry before barbequeing. The burner should always be placed on the low setting during cooking. Always protect your hands when handling anything near the cooking surface of the BBQ.

End of Cooking Session

After each cooking session, turn the BBQ burner to the ‘high’ position and burn for 5 minutes. This procedure will burn off cooking residue, thus making cleaning easier.

Turning Off Your Barbecue

- Turn off at the control knob. Let the flame extinguish.
- Disconnect from the gas cartridge.

Grease Tray

- **IMPORTANT** – Check and clean the grease tray regularly before every use and replace if necessary. Do not allow the fat residue to build up in the tray.
- **NEVER** use without grease tray in position.

5. Care And Maintenance

5.1 Care

This appliance must only be serviced by an authorized person.

Regular care of your BBQ will help keep it operating properly. All maintenance should be done only when the BBQ is cool and with the fuel supply turned off. Occasionally inspect and tighten hardware that may become loose.

5.2 Cleaning The Venturi Tube

A spider's nest or wasp's mud inside the Venturi Tube can block gas flow and can even cause a fire at the gas control valve. Such a fire can cause operator injury and serious damage to your BBQ.

To prevent insect related problems, inspect the Venturi Tube regularly and remove any dirt.

WARNING!

Do not disassemble or alter the fuel supply system. Improper assembly can result in a hazardous condition. Seek qualified professional assistance if repairs are required.

5.3 Cleaning And Maintenance

- **WARNING: Do not clean any BBQ surface while BBQ is operating. Let BBQ cool to a safe temperature prior to cleaning.**
- Disconnect the fuel supply and remove the fuel supply cylinder prior to cleaning.
- Cleaning should be done where detergent won't harm work surface or lawn. **Do not leave the BBQ exposed to outside weather conditions or stored in damp, moist areas.**
- Never douse the BBQ with water when its surfaces are hot.
- Never handle hot parts with unprotected hands.
- In order to extend the life and maintain the condition of your barbecue, we strongly recommend that the unit is covered when left outside for any length of time, especially during the winter months.
- Change the flexible tube when the national conditions require it..
- Keep outdoor cooking gas appliance area clear and free from combustible materials, gasoline and other flammable vapors and liquids.

Grill Grate

- The grill grate should be hand washed.
- To remove any food residue, use a mild cream cleaner on a non-abrasive pad.
- Rinse well and dry thoroughly.

BBQ Body

- Regularly remove excess grease or fat from the BBQ body with a soft plastic or wooden scraper.
- It is not necessary to remove all the grease from the body. If you need to clean fully, use hot soapy water and a cloth, or nylon-bristled brush only.
- Remove cooking surfaces and burner before full cleaning.
- Do not immerse the gas controls or manifold in water.
- Check burner operation after carefully refitting into body.

Burner Maintenance

- In normal usage, burning off the residue after cooking will keep the burner clean.
- The burner should be cleaned annually, or whenever heavy build-up is found, to ensure that there are no signs of blockage (debris, insects) in either the burner portholes or the venturi tubes of the burner fitted over the valve outlets. A clogged tube can lead to a fire beneath the BBQ.

Servicing

- The BBQ should be serviced regularly by an authorised person (gasfitter or plumber). It is recommended that the appliance is serviced every 1 year or for every 1000 hours of use.
- Any necessary replacement parts can be ordered by contacting Cuisinart Customer Service on 1800 566 567
- Do not modify this appliance.

Storage

- When storing, ensure the gas cartridge is disconnected and sealed.
- Store the cartridge outdoors in a well ventilated area out of the reach of children.
- Store appliance in a dry well ventilated space.

6. FAQ and Troubleshooting

Frequently Asked Questions

Can I use a 20lb LP tank?

No, only 400 - 450g propane cartridge /gas cylinder can be used. It may be hazardous to attempt to fit any other types of gas cartridges/cylinders.

Can I use my Cuisinart Gas BBQ with natural gas?

NO. Your Cuisinart Gas BBQ is intended for use only with LP (Liquid Propane) gas. Natural Gas is NOT Liquid Propane. Never use any other fuel source with your BBQ, as it will create a dangerous situation.

Can I add lava rocks, ceramic tiles, or charcoal briquettes to my Cuisinart Gas BBQ?

NO. Your BBQ is not intended to operate with these items, and doing so may create an unsafe situation, and will void your warranty.

Where can I buy accessories or replacement parts?

Visit www.cuisinart.com.au or 1800 566 567.

What is the gas consumption?

9.5MJ/h

What is the injector size?

0.85MM

Troubleshooting

Burner won't light (using the ignition system)

- Be sure propane cartridge still has fuel in it by gently shaking it - there will be sounds of liquid inside if fuel remains.
- Ensure propane cartridge is correctly threaded into regulator (not cross threaded) and fully tightened.
- Check to see that burner orafice holes are clear. If obstructed, with gas bottle disconnected, gently brush orafice holes with a small brush.
- Check to see that ignitor is producing a spark against the burner (best checked in shady spot).

If above does not solve problem, replace with new cartridge and attempt lighting again.

7. Warranty

Cuisinart warrants that, in the unlikely event that this product develops any malfunction within 36 months of purchase of the product used for household or domestic use (or within 3 months of purchase of the product used for commercial use) due to faulty workmanship, materials or manufacture, we will either (at our discretion) repair or replace it for you.

This warranty applies for a period of 36 months for products purchased for household or domestic use (and 3 months for products purchased for commercial use) from the date of purchase of the product after which time the warranty expires and has no further force of effect.

Should you experience any operating difficulties refer to the FAQ in this booklet or contact Customer Service for advice on 1800 566 567 in Australia or 0800 456 546 in New Zealand.

Please retain your Guarantee Card and the Purchase Receipt as proof of purchase in order for your warranty entitlement to be valid. These documents must be presented in the event of making a claim under the terms of the Cuisinart Warranty Policy.

During the warranty period Cuisinart will repair or replace (at our discretion) any defective product. However, if the product includes a number of accessories, only the defective part or relevant accessory will be replaced. Cuisinart reserves the right to make minor adjustment to fix any defect instead of replacing the entire product or accessory.

Packaging, instructions, recipe books etc. will not be replaced unless faulty. A product presented for repair may be replaced by a refurbished product of the same type rather than being repaired. Refurbished parts may be used to repair the product. In the event of a product or accessory being replaced during the warranty period, the guarantee on the replacement product or accessory will expire 36 months for household or domestic use (or 3 months for commercial use) from the original purchase date.

This warranty covers defects in parts and workmanship for a period of 3 years from the original purchase date. Any damage claim regarding the enameling must be submitted within 30 days of purchase to be covered by the warranty.

The following conditions are NOT covered by this warranty:

- Unevenness and color variations in the coated surfaces.
- Damage caused by improper assembly or disregard of the manual.
- Use of spare parts not supplied by manufacturer.
- Damage resulting from modifications or inappropriate use.
- Abuse of the BBQ
- Damage caused by improper maintenance or repairs by an unauthorized person.

Limitations and exclusions:

1. This warranty applies only to the original purchaser and may not be transferred.
2. If you can not verify the purchase date of the BBQ the warranty period will begin on the date the BBQ was manufactured.
3. Replacement or repair parts are warranted for the remaining period of the original part warranty.

Your obligations:

This BBQ must be assembled, installed, operated and maintained in accordance with all applicable codes and the instruction manual furnished with this BBQ. You must keep an invoice, cancelled check or payment record to verify the purchase date of the BBQ.

This warranty does not include or cover the following.

- defects caused by the product not being used in accordance with instructions;
- defects caused by accidental damage;
- defects caused by misuse or negligent handling of the product;
- defects caused by being tampered with by unauthorised persons;
- defects caused by the product not being maintained or cleaned according to instructions;
- defects which are normal or fair wear and tear;
- freight or any other costs incurred in making a claim;
- consumable items or accessories that by their nature and limited lifespan require periodic renewal (such as filters, seals, blades or related accessories (such as trays or utensils, light bulbs);
- products serviced or modified other than by Cuisinart or an authorised Cuisinart representative;
- use of the product with other accessories, attachments, product supplies, parts or devices that do not conform to Cuisinart specifications;
- exposure of the product to abnormally corrosive conditions;
- any product which has its serial number or appliance plate removed or defaced;
- to any claims made beyond 3 months from the date of purchase if the product is used in commercial, industrial, educational or rental applications;
- to any claims made beyond 36 months from the date of purchase if the product is used in household or domestic applications.
- products purchased from any person who is not a retailer serviced by Conair's authorised distributors, overseas retailers, parallel importers or purchased second hand.

The benefits given to you by our warranty are in addition to other rights and remedies under the Australian Consumer Law.

In Australia our goods come with guarantees that cannot be excluded under the Australian Consumer Law. You are entitled to a replacement or refund for a major failure and for compensation for any other reasonably foreseeable loss or damage.

You are also entitled to have the goods repaired or replaced if the goods fail to be of acceptable quality and the failure does not amount to a major failure.

Our goods also come with guarantees that cannot be excluded under the New Zealand Guarantees Act. To make a Warranty Claim or request a Spare Part, Contact our customer service agents:

Cuisinart Australia
Ph: 1800 566 567
PO Box 146, Terrey Hills,
NSW 2084 AUSTRALIA
Attn: Cuisinart Returns
Cuisinart New Zealand
Ph: 0800 456 546

YOU MUST provide your full name, address, email and phone details. A copy of your proof of purchase must be supplied. You can contact Cuisinart Australia/New Zealand via email at aus_cuisinart@conair.com or through the "Contact Us" option on the Cuisinart website www.cuisinart.com.au.

The warranty contained in this document is provided by:

Conair Australia Pty Ltd (ACN 068 492 044) (Cuisinart)
18 Rodborough Rd,
Frenchs Forest, NSW 2086
Australia

©2024 Cuisinart
Suite 101 Ground Floor 18 Rodborough Rd
Frenchs Forest NSW, 2086 Australia
Visit our Website: cuisinart.com.au
Printed in China

IB-24/275

Cuisinart®